Sign Base - Octagon Product Specifications

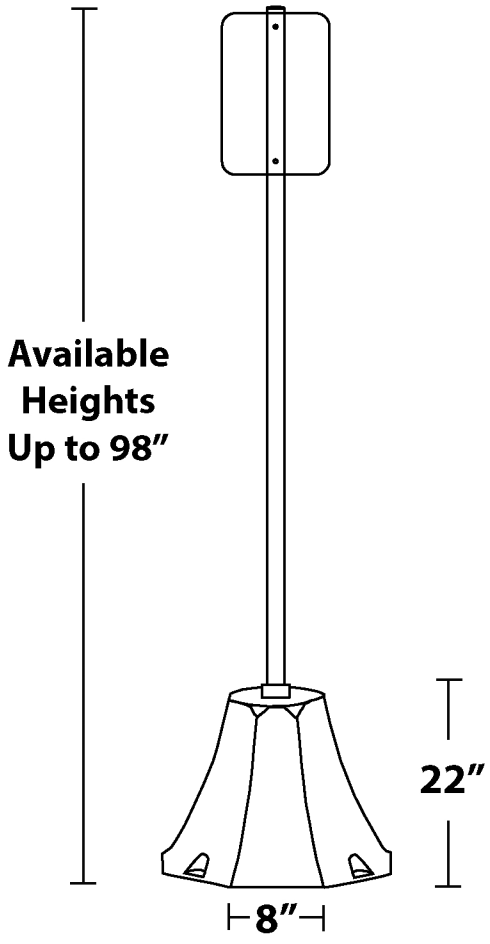

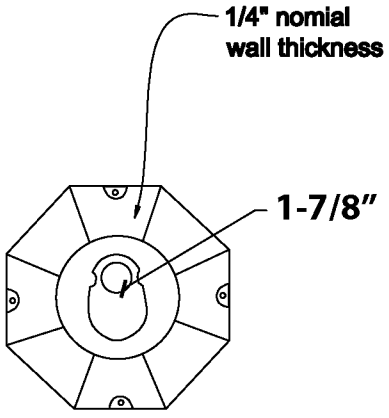

Top View

SPECIFICATIONS

Sign Base Material:

1/4" Nominal Wall Thickness
Low-Density Polyethylene Thermoplastic
w/Ultra-Violet and Anti-Static Additives

Sign Base Dimensions:

22" H x 8" W each side

Weight:

45 lbs. with pole

Colors:

Standard colors: OSHA Yellow, Blue or Red
Custom colors available

Height:

Standard Height is 98" without wheels

Installation:

Fill with concrete, sand or water
Up to 11.5 Gal. of water (approx. 96 lbs.)

NO.	REVISIONS	DATE	APPROVED

BOLLARDS AND SLEEVES LLC

PROJECT	CUSTOMER	DESCRIPTION	DRAWN BY:	APPROVED BY:	DATE:
		Sign Base - Octagon	PROJECT NO.: —		SCALE
			FINISH		DRAWING NO.:
			MATERIAL:		SHEET 1 OF 1

1-800-914-4771 ▪ sales@bollardsandsleeves.com ▪ www.bollardsleeves.com